Mod./Type: **_70/... CFGB...**

NISBETS

cod./num. 2531876.00

data/date: 11/11/2014

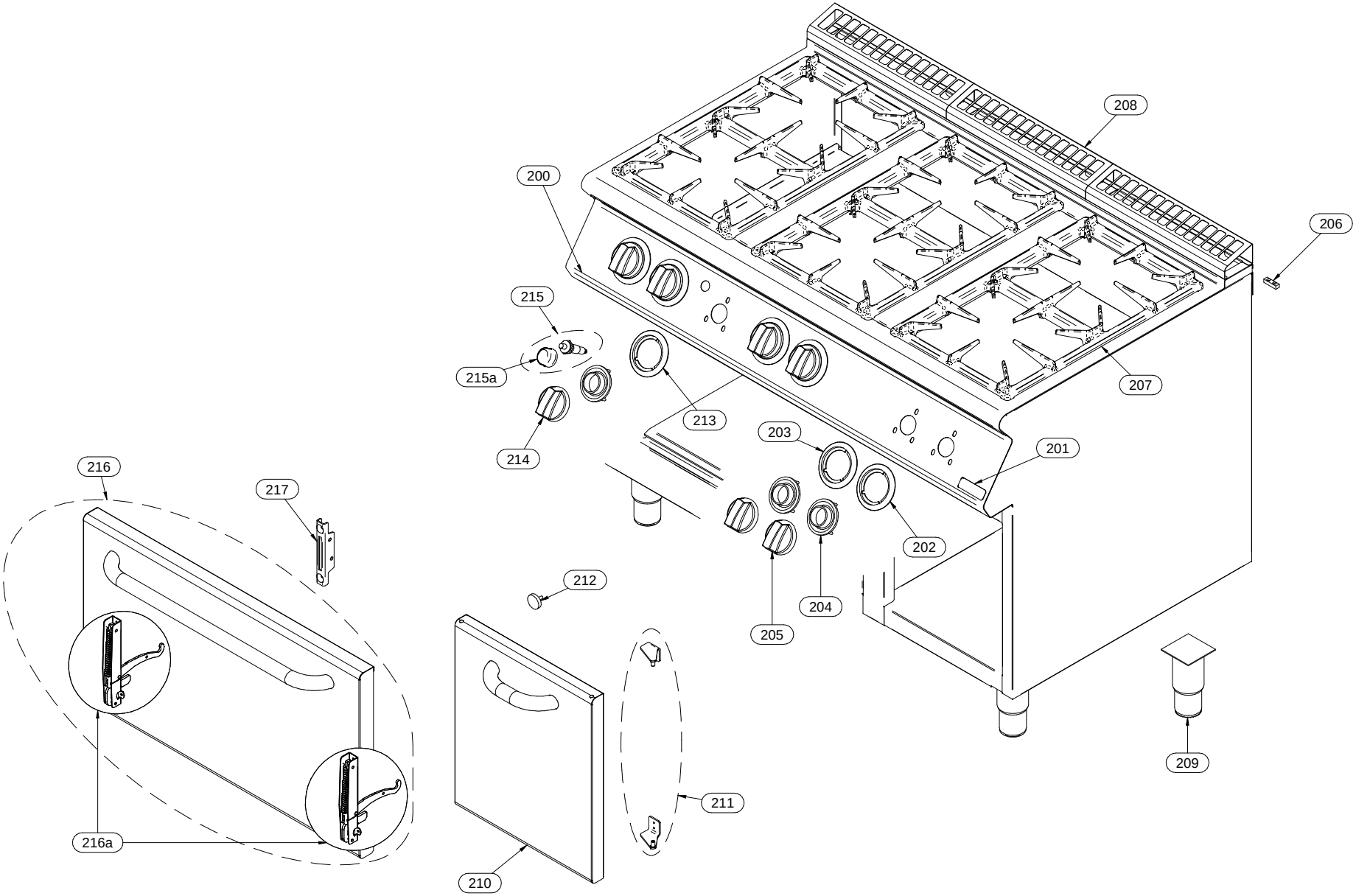

Mod.:	_70/... CFGB NISBETS			cod. / num. 2531877.00 data / date 11/11/2014 rif. / ref. 2531876.00		VS70/80 CFGB VS70/80 CFGBI	VS70/120 CFGB VS70/120 CFGBI	NOTE
POS.	DESCRIZIONE	DESCRIPTION	DENOMINATION	BENENNUNG	COD.	Q. ty		
200	CRUSCOTTO	CONTROL PANEL	BANDEAU	BEDIENBLENDE	9111620.00	1	-	
					9111622.00	-	1	
201	MARCHIO	BRAND NAME	MARQUE	MARKENZEICHEN	250.844.00	1	1	
202	SERIGRAFIA	SCREEN PRINT	SÉRIGRAPHIE	SIEBDRUCK	910.163.00	2	3	
203	SERIGRAFIA	SCREEN PRINT	SÉRIGRAPHIE	SIEBDRUCK	910.164.00	2	3	
204	LABIRINTO	LABYRINTH	LABYRINTHE	LABYRINTH	256.218.00	5	7	
205	MANOPOLA	KNOB	BOUTON	DREHKNOPF	951.072.00	4	6	
206	PIASTRINA GIUNZIONE	FIXING PLATE	PLAQUETTE FIXAGE	BEFESTIGUNGSPLATTE	941.130.00	1	1	
207	GRIGLIA	GRID	GRILLE	ROST	681.008.14	2	3	
208	GRIGLIA CAMINO	FLUE GRIDDLE	GRILLE POUR CHEMINÉE	KAMINROST	9211777.00	2	3	
209	PIEDINO	FOOT	PIED	STELLFUSS	912.090.14	4	4	
210	PORTA	DOOR	PORTE	TÜR	256.380.00	-	1	
211	COPPIA CERNIERE	GASKETS PAIR	COUPLE CHARNIÈRES	SCHARNIERPAAR	256.216.00	-	1	
212	MAGNETE	MAGNET	MAGNÉTO	MAGNET	984.006.00	-	1	
213	SERIGRAFIA	SCREEN PRINT	SÉRIGRAPHIE	SIEBDRUCK	910.166.00	1	1	
214	MANOPOLA FORNO	OVEN KNOB	BOUTON DU FOUR	OFENKNOPF	951.074.00	1	1	
215	ACCENDITORE PIEZO	PIEZO LIGHTER	ALLUMEUR PIEZO	PIEZOZÜNDER	912.091.00	1	1	
215a	CAPPUCCIO	CAP	CAPUCHON	KAPPE	951.047.00	1	1	
216	PORTA	DOOR	PORTE	TÜR	256.248.00	1	1	
216a	CERNIERA	JOINT	CHARNIERE	SCHARNIER	684.030.00	2	2	
217	PORTARULLINO	ROLL HOLDER	PORTE-AIGUILLE DE ROULEMENT	ROLLE-TRÄGER	684.011.00	2	2	
218								
219								
220								
221								
222								
223								
224								
225								
226								
227								
228								
229								
230								

Mod./Type: **_70/... ...FG... - _90/... ...FG...**

GAS OVEN

cod./num. 2531592.00

data/date: 01/11/2013

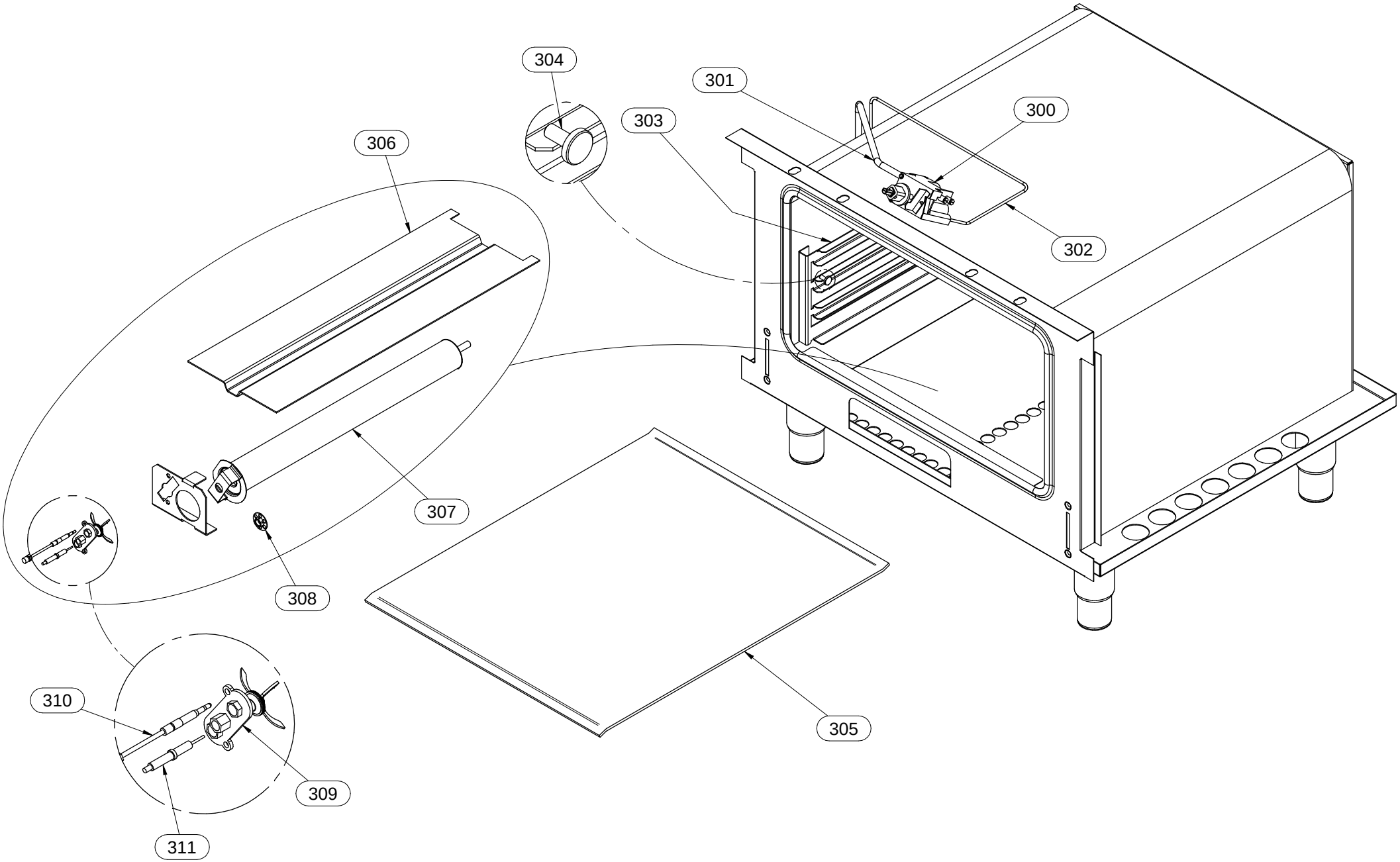

Mod.:	_70/… ...FG... - _90/… ...FG… GAS OVEN			cod. / num. 2531593.00 data / date 09/06/2014 rif. / ref. 2531592.00		_70/… ...FG... _90/… ...FG...	_90/160 ...FG...	_70/... TPFG... _90/... TPFG...	NOTE
POS.	DESCRIZIONE	DESCRIPTION	DENOMINATION	BENENNUNG	COD.	Q. ty			
300	VALVOLA GAS	GAS VALVE	SOUPAPE GAZ	GAS VENTIL	256.277.00	1	2	1	
301	TUBO GAS	GAS PIPE	TUYAU DE GAZ	GASLEITUNG	256.244.00	1	2		
					256.280.00			1	
302	TUBO GAS	GAS PIPE	TUYAU DE GAZ	GASLEITUNG	256.247.00	1	2		
					256.281.00			1	
303	REGGIGRIGLIA	TRAY RACK	PORTE-PLAQUES	EINHÄNGEGESTELL	622.967.00	2	4	2	
304	FISSAGGIO REGGIGRIGLIA	TRAY RACK FIXING	FIXAGE PORTE-PLAQUES	BEFESTIGUNG DES EINHÄNGEGESTELLS	641.090.00	4	8	4	
305	SUOLA FORNO	INNER OVEN SOLE	SOLE DU FOUR	OFENINNENBODEN	635.029.00	1	2	1	
306	PROTEZIONE	PROTECTION	PROTECTION	SCHUTZ	622.969.00	1	2	1	
307	BRUCIATORE	BURNER	BRULEUR	BRENNER	672.152.00	1	2	1	
308	AERATORE	AERATOR	AÉRATEUR	LÜFTER	941.124.00	1	2	1	
309	GRUPPO PILOTA	PILOT GROUP	GROUPE VEILLEUSE	ZÜNDBRENNER GRUPPE	672.042.00	1	2	1	
310	TERMOCOPPIA	THERMOCOUPLE	THERMOCOUPLE	THERMOELEMENT	672.154.00	1	2		
					672.179.00			1	
311	CANDELA ACCENSIONE	IGNITION ELECTRODE	BOUGIE D'ALLUMAGE	KERZE SCHNELLBRENNER	256.017.00	1	2	1	
312									
313									
314									
315									
316									
317									
318									
319									
320									
321									
322									
323									
324									
325									
326									
327									
328									
329									
330									
331									
332									
333									
334									
335									

Mod./Type:	_70/... PCGB... - CFG...B... - TP...G...B...	cod./num.	2531873.00
	_90/... PCGB... - CFG...B... - TP...G...B...	data/date:	06/11/2014

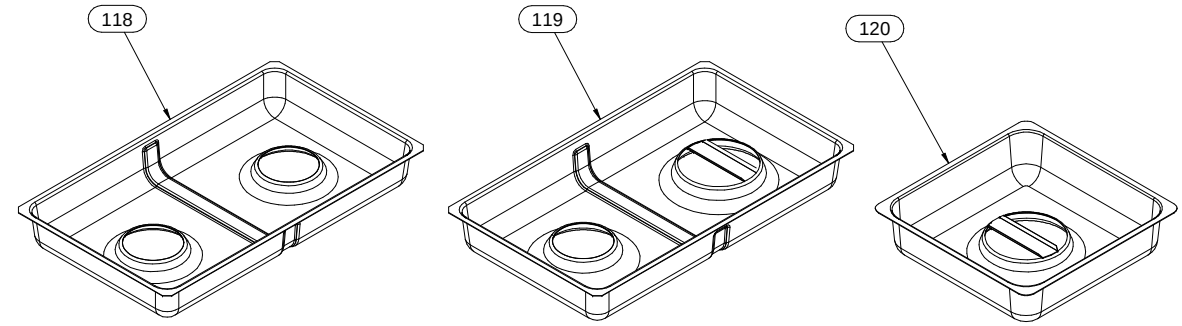

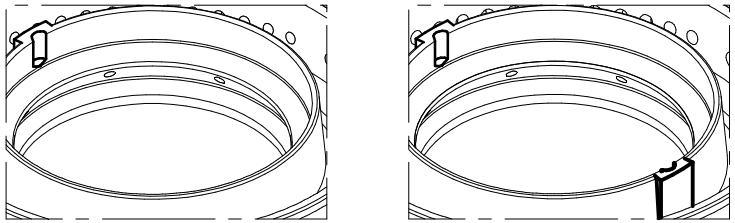

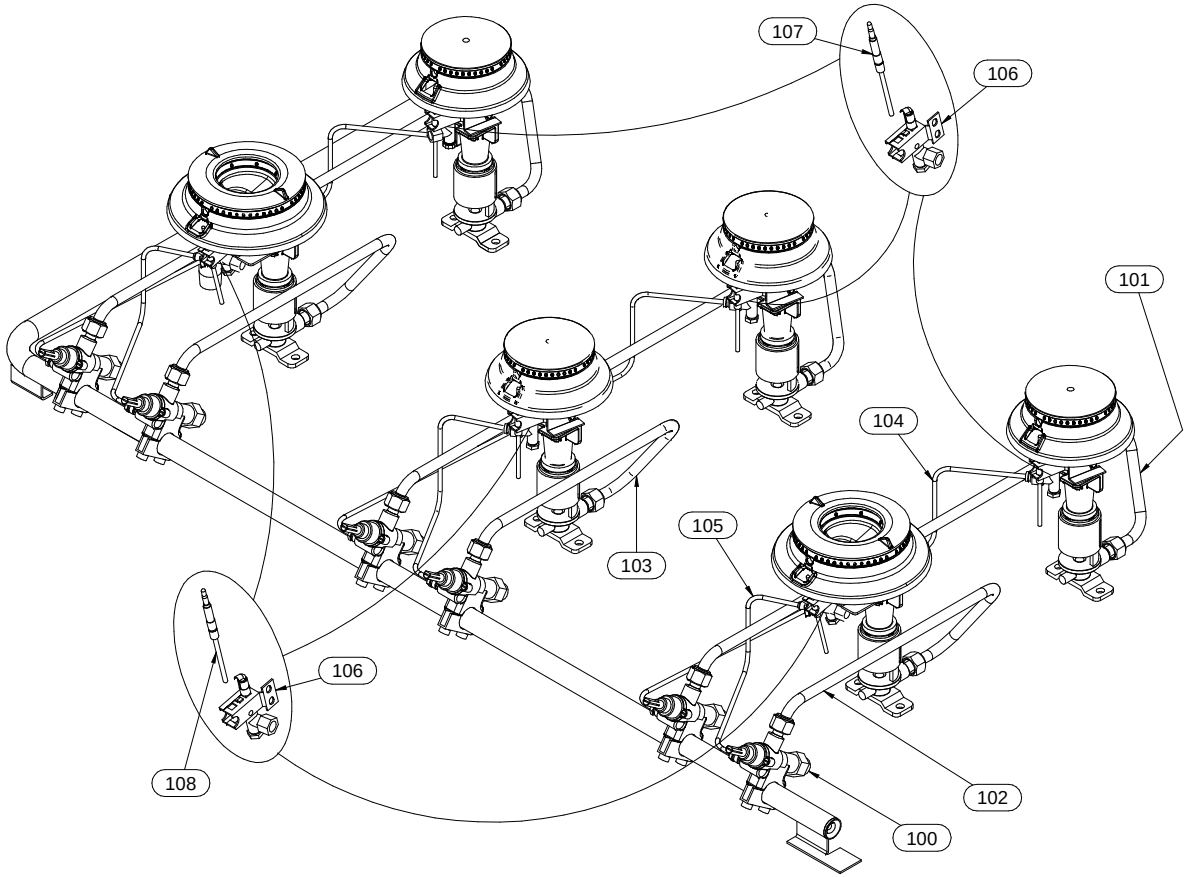

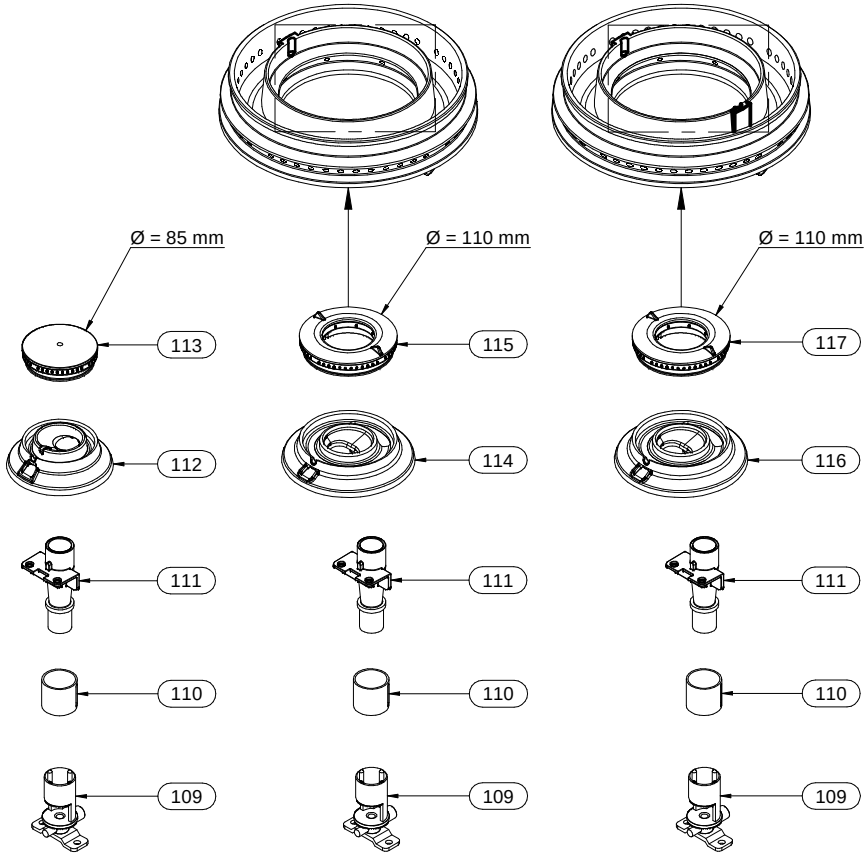

Mod.:	_70/... PCGB... - CFG...B... - TP…G...B… _90/… PCGB... - CFG...B... - TP...G...B…			cod. / num. 2531874.00 data / date 06/11/2014 rif. / ref. 2531873.00		_70/40 PCGB...	_70/80 PCGB... - ...CFGB - ...CFGEB	_70/120 PCGB... - ...CFG...B	_90/40 PCGB...	_90/80 PCGB... - ...CFGB - ...CFGEB	_90/120 PCGB... - ...CFG...B	_90/160 PCGB... - ...CFGB - ...CFGEB	_70/80 TPPCGB... - ...TPPCFGB	_70/120 TPPCG2B... - ...TPPCFG2B	_70/120 TPFGB	_90/80 TPPCGB... - ...TPPCFGB	_90/120 TPPCG2B... - ...TPPCFG2B	_90/1	NOTE
POS.	DESCRIZIONE	DESCRIPTION	DENOMINATION	BENENNUNG	COD.	Q. ty													
100	RUBINETTO GAS	GAS TAP	ROBINET GAZ	GASHAHN	671.088.00	2	4	6	2	4	6	8	2	4	2	2	4	2	
101	TUBO GAS	GAS PIPE	TUBE GAZ	GASROHR	256.381.00	1	2	3					1	2	1				
					256.385.00				1	2	3	4				1	2	1	
102	TUBO GAS	GAS PIPE	TUBE GAZ	GASROHR	256.382.00	1	2	2					1	2	1				
					256.386.00				1	2	3	4				1	2	1	
103	TUBO GAS	GAS PIPE	TUYAU DE GAZ	GASLEITUNG	256.389.00	-	-	1	-	-	-	-	-	-	-	-	-	-	
104	TUBO GAS	GAS PIPE	TUBE GAZ	GASROHR	256.383.00	1	2	3					1	2	1				
					256.387.00				1	2	3	4				1	2	1	
105	TUBO GAS	GAS PIPE	TUBE GAZ	GASROHR	256.384.00	1	2	3					1	2	1				
					256.388.00				1	2	3	4				1	2	1	
106	GRUPPO PILOTA	PILOT GROUP	GROUPE VEILLEUSE	ZÜNDBRENNER GRUPPE	672.080.00	2	4	6	2	4	6	8	2	4	2	2	4	2	
107	TERMOCOPPIA POSTERIORE	REAR THERMOCOUPLE	THERMOCOUPLE POSTERIEURE	HINTERES THERMOELEMENT	672.099.00	1	2	3	1	2	3	4	1	2	1	1	2	1	
108	TERMOCOPPIA ANTERIORE	FRONT THERMOCOUPLE	THERMOCOUPLE ANTERIEURE	VORDERES THERMOELEMENT	672.025.00	1	2	3	1	2	3	4	1	2	1	1	2	1	
109	PORTAUGELLO	NOZZLE HOLDER	PORTE-INJECTEUR	SPRITZDÜSE-TRÄGER	673.020.00	2	4	6	2	4	6	8	2	4	2	2	4	2	
110	BOCCOLA REGOLAZIONE ARIA	AIR REGULATION BUSHING	BAGUE DE RÉGULATION AIR	LUFTREGLERBÜCHSE	672.016.00	2	4	6	2	4	6	8	2	4	2	2	4	2	
111	VENTURI PER BRUCIATORE	VENTURI TUBE FOR BURNER	TUBE DE VENTURI POUR BRÛLEUR	VENTURI-DÜSE FÜR BRENNER	672.010.00	2	4	6	2	4	6	8	2	4	2	2	4	2	
112	BRUCIATORE 3,7kW	BURNER 3,7kW	BRULEUR 3,7kW	BRENNER 3,7kW	672.076.00	1	2	4	-	-	-	-	1	2	1	-	-	-	
113	SPARTIFIAMMA	FLAMESPREADER	CHAPEAU BRULEUR	FLAMMENTEILER	672.078.00	1	2	4	-	-	-	-	1	2	1	-	-	-	
114	BRUCIATORE 5,5kW	BURNER 5,5kW	BRULEUR 5,5kW	BRENNER 5,5kW	672.077.00	1	2	2	1	2	4	4	1	2	1	1	2	1	
115	SPARTIFIAMMA	FLAMESPREADER	CHAPEAU BRULEUR	FLAMMENTEILER	672.079.00	1	2	2	1	2	4	4	1	2	1	1	2	1	
116	BRUCIATORE 7,5kW	BURNER 7,5kW	BRULEUR 7,5kW	BRENNER 7,5kW	672.101.00	-	-	-	1	2	2	4	-	-	-	1	2	1	
117	SPARTIFIAMMA	FLAMESPREADER	CHAPEAU BRULEUR	FLAMMENTEILER	672.093.00	-	-	-	1	2	2	4	-	-	-	1	2	1	
118	BACINELLA	CONTAINER	BAC	BEHÄLTER	622.057.00	-	-	1	-	-	-	-	-	-	-	-	-	-	
119	BACINELLA	CONTAINER	BAC	BEHÄLTER	611.383.00	1	2	2	-	-	-	-	1	2	1	-	-	-	
120	BACINELLA	CONTAINER	BAC	BEHÄLTER	911.011.00	-	-	-	2	4	6	8	-	-	-	2	4	2	
121																			
122																			
123																			
124																			
125																			
126																			
127																			
128																			
129																			
130																			
131																			
132																			
133																			
134																			
135																			
136																			
137																			
138																			
139																			
140																			
141																			
142																			
143																			
144																			
145																			